Avery Weigh-Tronix

# ZM

## 305 SERIES

Indicators to measure and control your daily operations.

*Technical Specification*

*ZM305*
*IP69K Stainless Steel Enclosure*
*IBN Display*

IP69K

*ZM305 GTN*
*IP69K Stainless Steel Enclosure*
*IBN Display*

IP69K

ETHERNET

USB

SERIAL

## DESCRIPTION

These high performance, multi-function indicators give you the flexibility required to suit your applications.

Suitable for the office, dusty, wet or high pressure and heavy washdown environments, the ZM305 series will analyze, store, display and transmit data across a range of technology methods to meet your specific installation.

## SPECIFICATIONS

### GENERAL

| | |
|---|---|
| **Operating Applications** | **ZM305 Standard** General weighing, in-motion weighing, accumulation, check weighing, counting, peak measurement, batching and remote display<br>**ZM305 GTN Inbound-Outbound**, 1000 Fleet In/Out transaction storage and calculations |
| **Unit of Measure** | Six, configurable (Pounds, Kilograms, Ounce, Gram, Pound/Ounce, Custom), up to four can be active |
| **Capacity Selections** | 9,999,999 with decimal located zero to five places |
| **Incremental Selections** | Multiples and sub-multiples of 1, 2, 5 |
| **Programmable Selections** | Zero range, motion detection, automatic zero tracking, five point linearization |
| **Time and Date** | Battery backed up time/date/year (12 hr AM/PM or 24 hour format) |
| **Calibration** | Two to five points stored |
| **Analog to Digital Measurement Rate** | 80 Hz |
| **Internal Resolution** | 53,687,100 counts per mV/V per second |
| **Digital Filtering** | Harmonizer filtering with adaptable constant and threshold |
| **Self Diagnostics** | Display, keys, inputs, outputs, serial port, Scale A to D, USB port and option cards |
| **Dynamic Weighing** | Minimum nominal weigh time 100 milliseconds, recommended minimum three hundred milliseconds. |

## USER INTERFACE

| | |
|---|---|
| **Keypad** | 24 key chemical resistant keypad with metal domed tactile feedback |
| **Operational Keys** | *ZM305:* Zero, Print, Units, Tare, Select, Sample, Target, ID, Start, Stop, 0-9, Decimal, Clear, Setup and F1<br>ZM305 GTN: Zero, Print, Units, Tare, Select, Fleet, Setup, ID, In/Out, Report, Start, Stop, 0-9, Decimal and Clear |
| **Status Annunciators** | Center of Zero, Motion, Gross, Net, Tare, Count, Print, Battery status, Set point 1,2,3, Over/Under/Accept bar graph or fill bar graph, lb, kg, gram, oz, Preset Tare, Quantity, Custom unit of measure, Active Ethernet connection. |
| **Display** | *IBN illuminated:* seven digit, nine segment display, green characters with black background 0.8" (20 mm) high digits<br>Annunciators for status and mode identification<br>Sortbar/Checkweigher segments |
| **Display Rate** | Selectable (1, 2, 5, 10, 20) times per second |

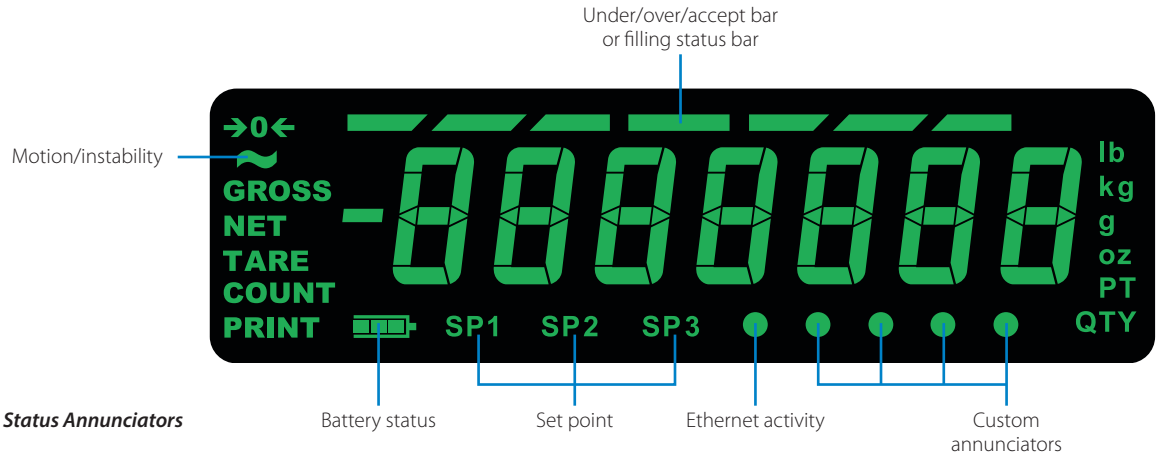


***Status Annunciators***

## PHYSICAL

| | |
|---|---|
| **Enclosures** | *Stainless steel:* 304 brushed stainless steel (IP69K certified) with GORE® Vent ventilation and tilt stand with provisions for desk, wall and column mounting |
| **Operating Temperature** | 14° F to 104° F / -10° C to 40° C (Compliance with legal for trade requirements)<br>-4° F to 140° F / -20° C to 60° C (industrial)<br>10 to 90% humidity non condensing |
| **Shipping Weight** | Stainless steel: 8.09 lb (4.05 kg) |
| **Dimensions (L X W X H)** | *Stainless steel:* 9.6" x 5" x 8.8" (243 mm x 127 mm x 223 mm) |

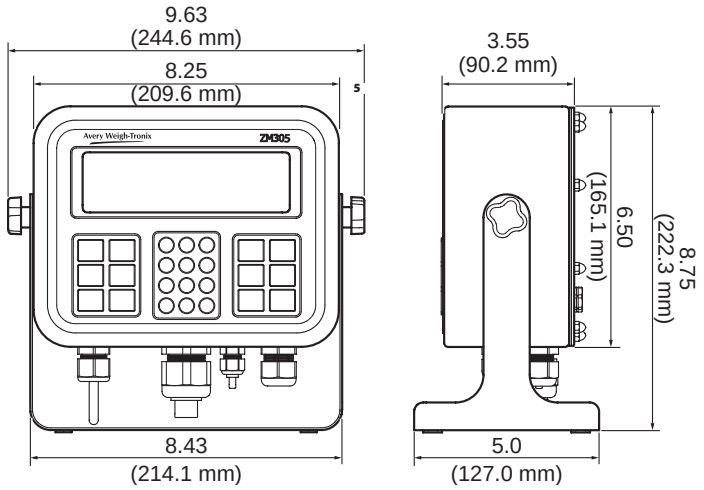


***Stainless Steel*** **IP69K**

## INPUT/OUTPUT

| | |
|---|---|
| **Remote Inputs** | Three logic level inputs for Zero, Print, Tare, Units, F1, and more |
| **Standard Outputs** | Three set point outputs |
| **Serial Ports** | Two serial ports:<br>- Comm 1 RS232 full duplex<br>- Comm 2 RS232 full duplex<br>Or<br>- Comm 1 RS232 full duplex with handshaking<br>- Comm 2 Not available<br>Programmable serial response to ASCII input<br>SMA protocol, broadcast, enquire<br>NCI protocol |
| **USB Host** | Printer<br>USB flash memory |
| **Ethernet** | The Ethernet port can be configured to support five independent devices, it supports DHCP client/server and Ethernet sockets plus it supports all the serial protocols |
| **Fieldbus** | Ethernet IP and Modbus TCP |
| **Optional** | Analog output<br>Current Loop/RS485/RS422<br>USB Device<br>Internal (Ethernet) Wireless 802.11b/g<br>Extreme lightning protection |

## ELECTRICAL

| | |
|---|---|
| **Power Requirements** | *Line voltage:* 90-264 VAC (110-240 VAC nominal), frequency 50 or 60 Hz, 12 to 36 VDC<br>*Power consumption:* estimated at 250mA at 12VDC for one 350 ohm weigh sensor and 550mA at 12VDC for fourteen 350 ohm weigh sensors. |
| **Excitation** | 10 VDC, short circuit protected<br>Supports up to fourteen 350 ohm weight sensors<br>4 or 6 conductors with sense leads<br>Detachable plug connectors |
| **Analog Signal Input Range** | -1 m/V/V to 5 mV/V |
| **Analog Signal Sensitivity** | 0.1 µV/V/divisions minimum<br>0.5 µV/V/divisions recommended |
| **Circuitry Protection** | RFI, EMI and ESD protection |

## OPTIONS

| | |
|---|---|
| **PC Card (choose one)** | *Analog output card:* 0-5 VDC, 0-10 VDC and 4-20 mA<br>*Current Loop Card:* Current Loop and RS485/RS422<br>*USB device card:* Provides USB interface to PC<br>*Wireless (Ethernet) internal card:* 802.11b/g wireless data communications kit with antenna |
| **ZM-OPTO** | Provides setpoint interface |
| **USB Watertight Gland** | Rubberized and sealed |
| **Ethernet Watertight Gland** | Rubberized and sealed |

## APPROVALS

| | |
|---|---|
| **Patent** | US Patent 672,262 |
| **Agencies** | EC UK2923 & GB-1446 ≤10,000divs single interval Class III, ≤1000divs single interval Class IIII<br>R61 UK/0126/0122 & GB-1447 ≤10,000divs, Ref(x)=0.02, Scale Interval ≥ 0.5g<br>NTEP (US) Class III/IIIL 10,000 d (CC# 11-096A1)<br>OIML R76 Class III and IIII<br>Measurement Canada (AM-5841C)<br>Australia (NMI S570)<br>New Zealand (MCA 2100)<br>CE<br>UL/C-UL<br>IP69K (case) |

Measurement Canada Approved

Australian Government
National Measurement Institute

Ministry of Business, Innovation & Employment

Avery Weigh-Tronix

*www.averyweigh-tronix.com*

***Avery Weigh-Tronix is an ITW company***

ISO 9001

Avery Weigh-Tronix is a trademark of the Illinois Tool Works group of companies whose ultimate parent company is Illinois Tool Works Inc ("Illinois Tool Works"). Copyright © 2016 Illinois Tool Works. All rights reserved. This publication is issued to provide outline information only and may not be regarded as a representation relating to the products or services concerned. This publication was correct at the time of going to print, however Avery Weigh-Tronix reserves the right to alter without notice the specification, design, price or conditions of supply of any product or service at any time.